Anybus Communicator Variants

Item number	Product name
ABC4024	Anybus Communicator – Modbus RTU Server to EtherNet/IP Adapter
ABC4025	Anybus Communicator – Modbus RTU Server to Modbus TCP Server
ABC4026	Anybus Communicator – Modbus RTU Server to EtherCAT SubDevice
ABC4027	Anybus Communicator – Modbus RTU Server to PROFINET IO Device
ABC4028	Anybus Communicator – Modbus RTU Server to PROFIBUS DP Device
ABC4092	Anybus Communicator – Modbus RTU Server to Common Ethernet

© 2025 HMS Networks

Support and Resources



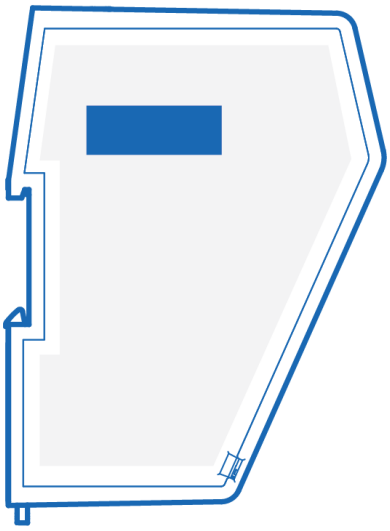

For additional documentation, software downloads, and technical support, scan the QR code or visit: www.hms-networks.com/technical-support.

To find the right resources, enter the item number — you find it on the product cover.

© 2025 HMS Networks
C000323 / 1.1 / 2025-11-05

Important User Information

Disclaimer

The information in this document is for informational purposes only. Please inform HMS Networks of any inaccuracies or omissions found in this document. HMS Networks disclaims any responsibility or liability for any errors that may appear in this document.

HMS Networks reserves the right to modify its products in line with its policy of continuous product development. The information in this document shall therefore not be construed as a commitment on the part of HMS Networks and is subject to change without notice. HMS Networks makes no commitment to update or keep current the information in this document.

The data, examples and illustrations found in this document are included for illustrative purposes and are only intended to help improve understanding of the functionality and handling of the product. In view of the wide range of possible applications of the product, and because of the many variables and requirements associated with any particular implementation, HMS Networks cannot assume responsibility or liability for actual use based on the data, examples or illustrations included in this document nor for any damages incurred during installation of the product. Those responsible for the use of the product must acquire sufficient knowledge in order to ensure that the product is used correctly in their specific application and that the application meets all performance and safety requirements including any applicable laws, regulations, codes and standards. Further, HMS Networks will under no circumstances assume liability or responsibility for any problems that may arise as a result from the use of undocumented features or functional side effects found outside the documented scope of the product. The effects caused by any direct or indirect use of such aspects of the product are undefined and may include e.g. compatibility issues and stability issues.

Trademarks

Anybus® is a registered trademark of HMS Networks.

All other trademarks are the property of their respective holders.

Software License Information

For license agreements regarding the third-party software used in the Communicator, refer to the *LICENSE.txt* file(s) included in the Communicator firmware update package zip file.

To download the Communicator firmware update package zip file, please visit www.hms-networks.com/technical-support.



TIP

Have the product article number available, to search for the product specific support web page. You find the product article number on the product cover.

© 2025 HMS Networks

Safety and Cybersecurity

Safety Symbols

DANGER
Instructions that must be followed to avoid an imminently hazardous situation which, if not avoided, will result in death or serious injury.

WARNING
Instructions that must be followed to avoid a potential hazardous situation that, if not avoided, could result in death or serious injury.

CAUTION
Instruction that must be followed to avoid a potential hazardous situation that, if not avoided, could result in minor or moderate injury.

IMPORTANT
Instruction that must be followed to avoid a risk of reduced functionality and/or damage to the equipment, or to avoid a network security risk.

Intended Use

The intended use of this equipment is as a communication interface and gateway.

The equipment receives and transmits data on various physical layers and connection types.

If this equipment is used in a manner not specified by the manufacturer, the protection provided by the equipment may be impaired.

General Safety

CAUTION
Ensure that the power supply is turned off before connecting it to the equipment.

CAUTION
This equipment contains parts that can be damaged by electrostatic discharge (ESD). Use ESD prevention measures to avoid damage.

CAUTION
To avoid system damage, the equipment should be connected to ground.

IMPORTANT
Using the wrong type of power supply can damage the equipment. Ensure that the power supply is connected properly and of the recommended type.

© 2025 HMS Networks

General Cybersecurity

IMPORTANT
It is important to maintain the cybersecurity of the Communicator.

Before connecting the Communicator to a PLC, ensure the PLC is configured and installed in accordance with the PLC supplier hardening guidelines.

IMPORTANT
To physically secure networks and equipment and to prevent unauthorized access, it is recommended to install the equipment in a locked environment.

IMPORTANT
After completing the configuration of the Communicator, lock the security switch to prevent unauthorized access to the Communicator built-in web interface.

IMPORTANT
To avoid exposure of sensitive data, always perform a factory reset before decommissioning the equipment.

Factory reset will reset any on site made configuration changes and set the Communicator to the same state as leaving HMS production.

© 2025 HMS Networks

Installation

Label the Communicator with Network Stickers

This topic applies to the Communicator Common Ethernet product variant.

You can use the included stickers to relabel the laser-engraved marking next to the network LED indicators and connectors, if needed.

Before You Begin

- Check which LEDs indicate the networks of the firmware installed on the Communicator.
- Check which connector is used for which network of the firmware installed on the Communicator.

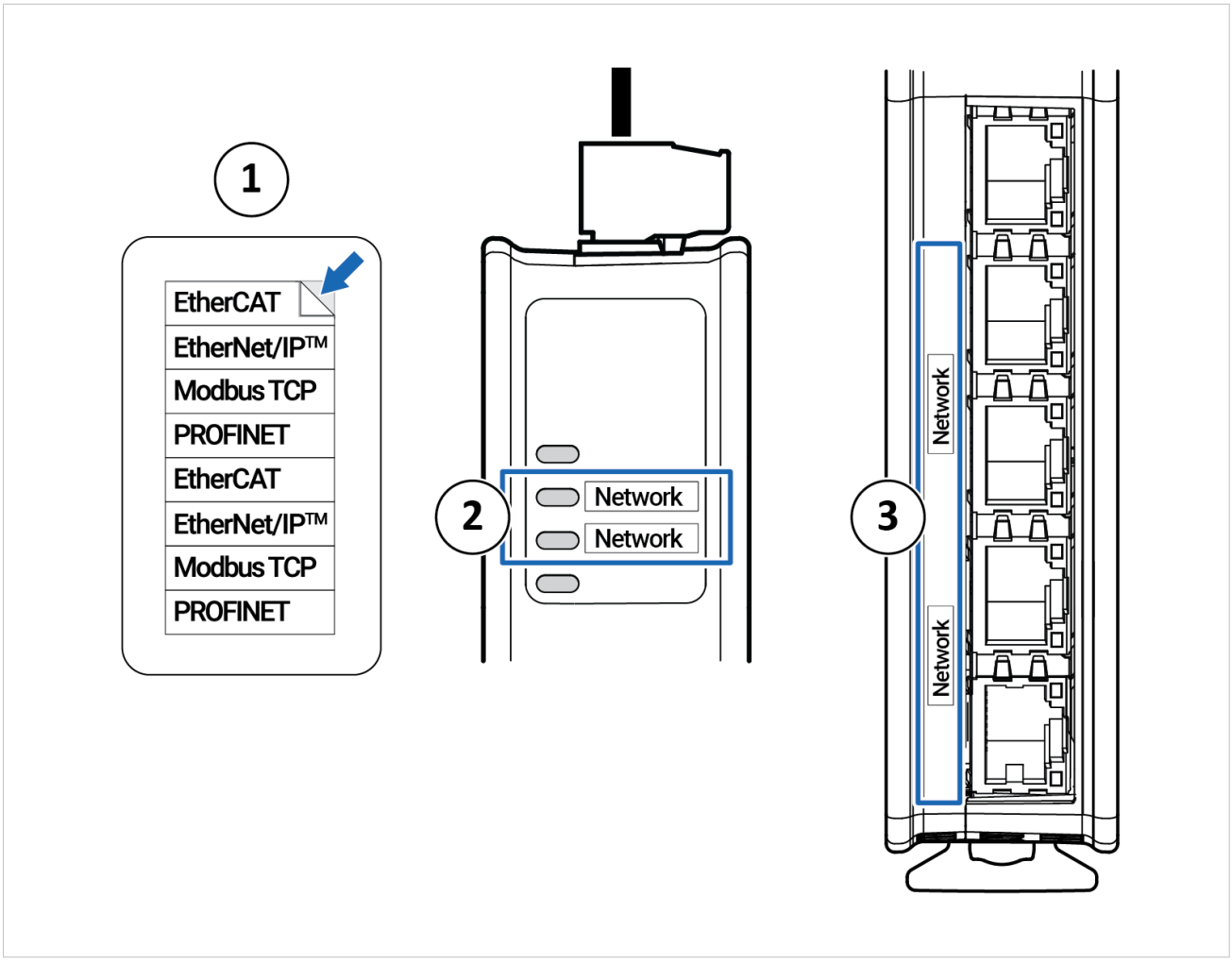

Figure 1. Place the tickers next to the Communicator LED indicators and connectors

© 2025 HMS Networks

DIN Rail Mounting

IMPORTANT
The equipment must be electrically grounded through the DIN rail for EMC compliance. Make sure that the equipment is correctly mounted on the rail and that the rail is properly grounded.

IMPORTANT
To physically secure networks and equipment and to prevent unauthorized access, it is recommended to install the equipment in a locked environment.

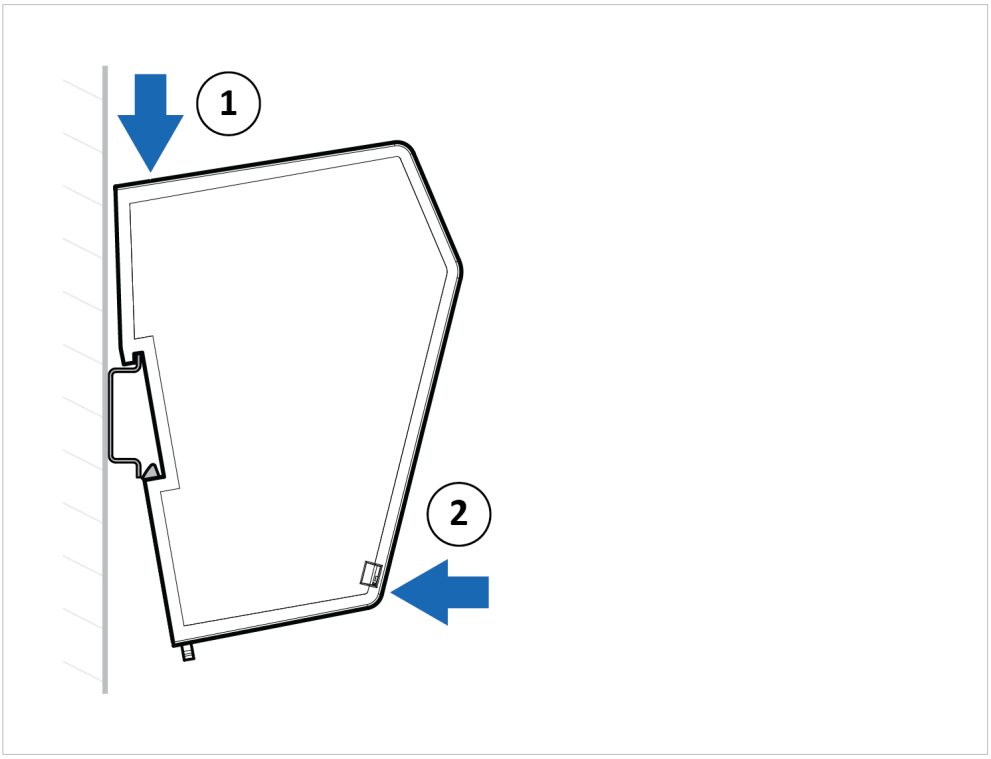

Figure 2. Attach the Communicator on the DIN rail

© 2025 HMS Networks

Rotary Switch Settings

Only Communicator PROFIBUS variants use rotary switches for configuration.

About the Rotary Switch Settings

- The default node address setting is 000.
- When the node address setting is 000, you can set the node address via the Communicator built-in web interface.
- The node address values are set in hexadecimal (hex).
- Minimum value is 00.
- Supports PROFIBUS node addresses 0-126 Dec (0-7E Hex).
- Each node address may only occur once in the network.
- The node address is read from the center rotary switch x16 to the front rotary switch x1.
- The rear rotary switch is not used, ensure that it is set to 0.

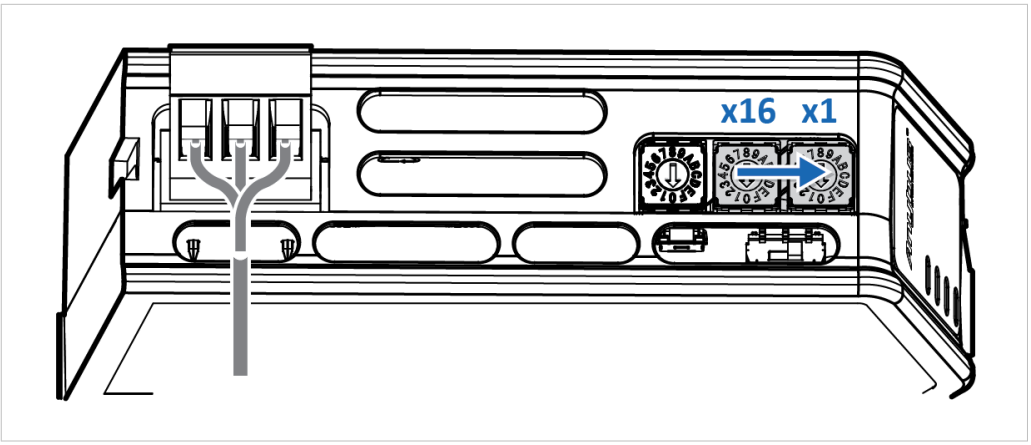

Procedure

To set a node address for the PROFIBUS server, use the rotary switches located on the top front of the Communicator .

© 2025 HMS Networks

1. Ensure that the Communicator is disconnected from power.

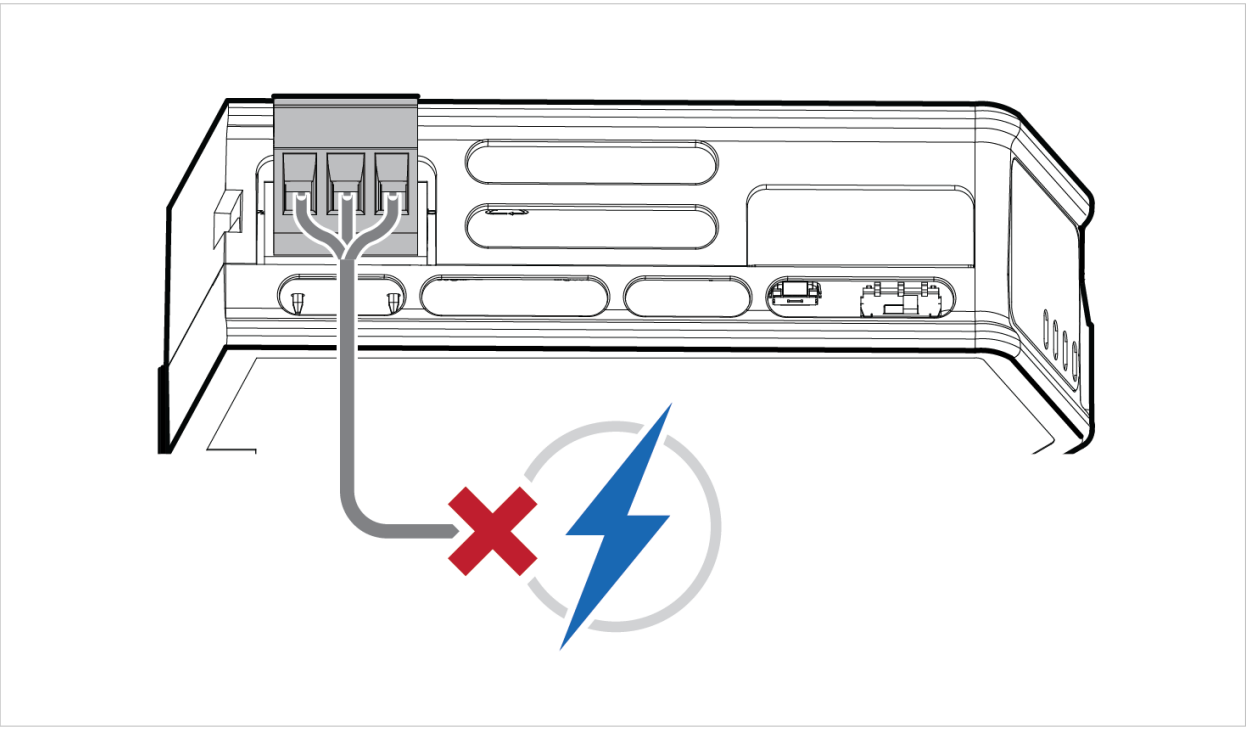

2. Use a screwdriver to change the rotary switch position.
   Ensure that the rotary switches engage correctly.

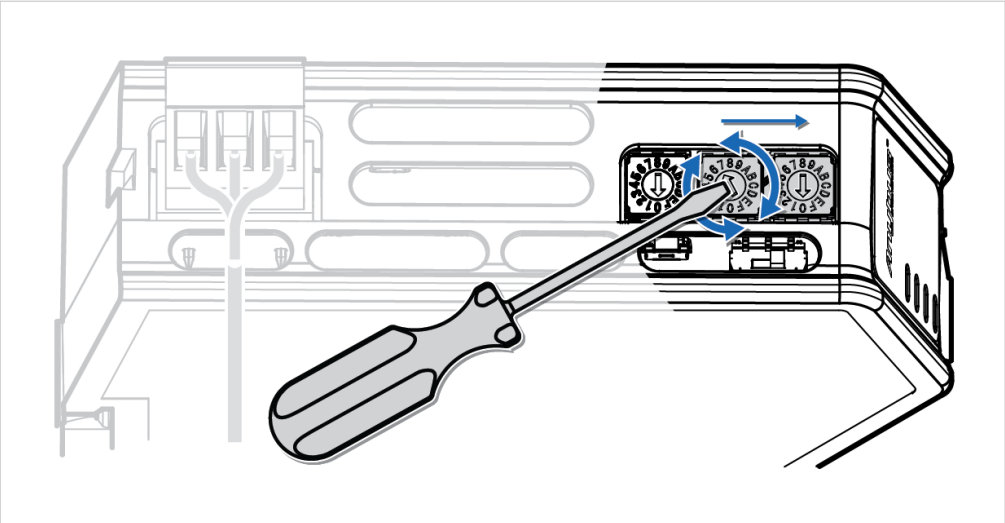

© 2025 HMS Networks

3. Connect the Communicator to power. See Connect to Power.

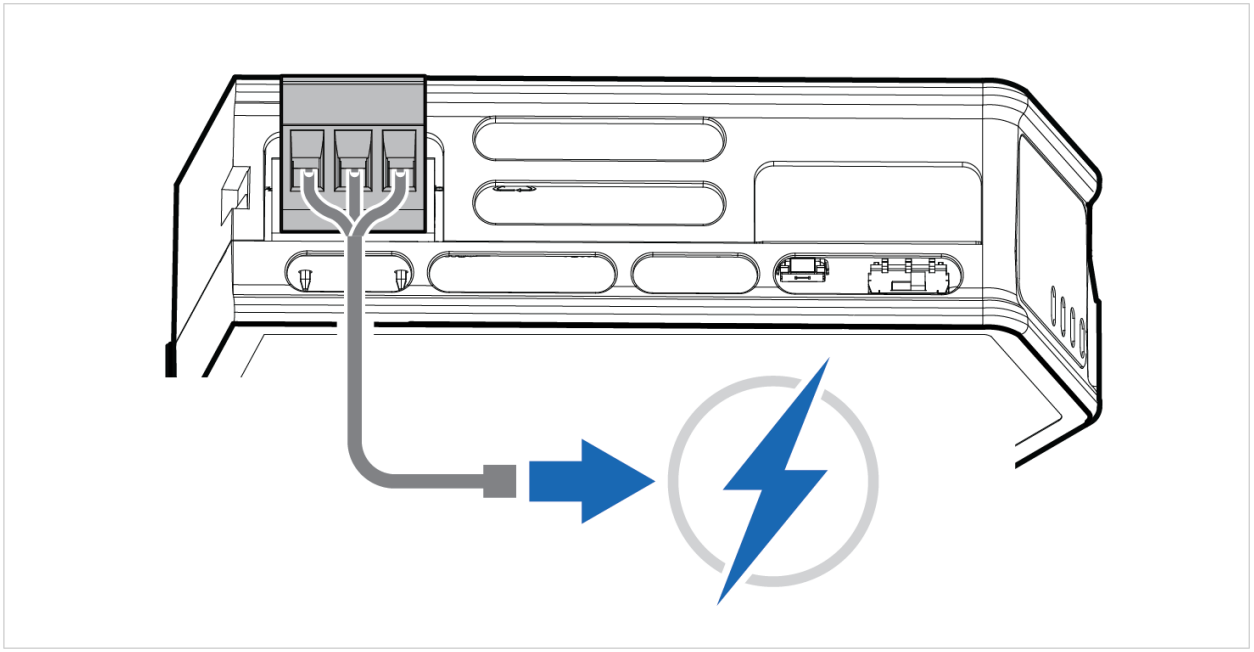

Result

The set node address is active as soon as the Communicator is powered on.

NOTE
Changing the address settings on the rotary switches during operation is ignored. For a new address to take effect, power cycle the Communicator.

© 2025 HMS Networks

Connect to Modbus RTU Server Network

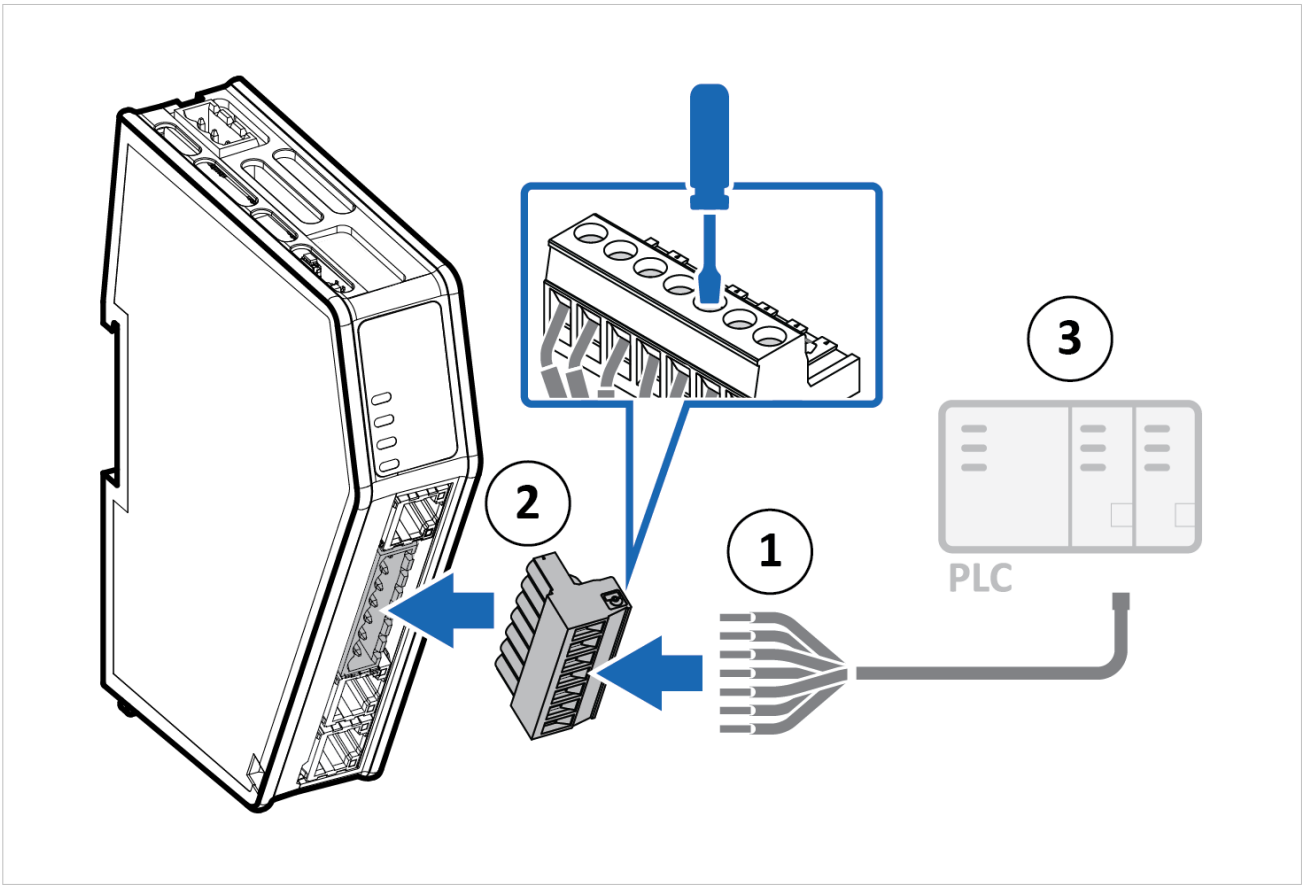

Figure 3. Connect Modbus RTU network

1. Insert the cable wires into the 7-pin connector and tighten the wire clamp screws.
2. Connect the 7-pin connector to the Communicator.
3. Connect the Communicator to your Modbus RTU server network.

© 2025 HMS Networks

Connect to Ethernet Network

PROFINET, EtherNet/IP, EtherCAT, or Modbus TCP Network

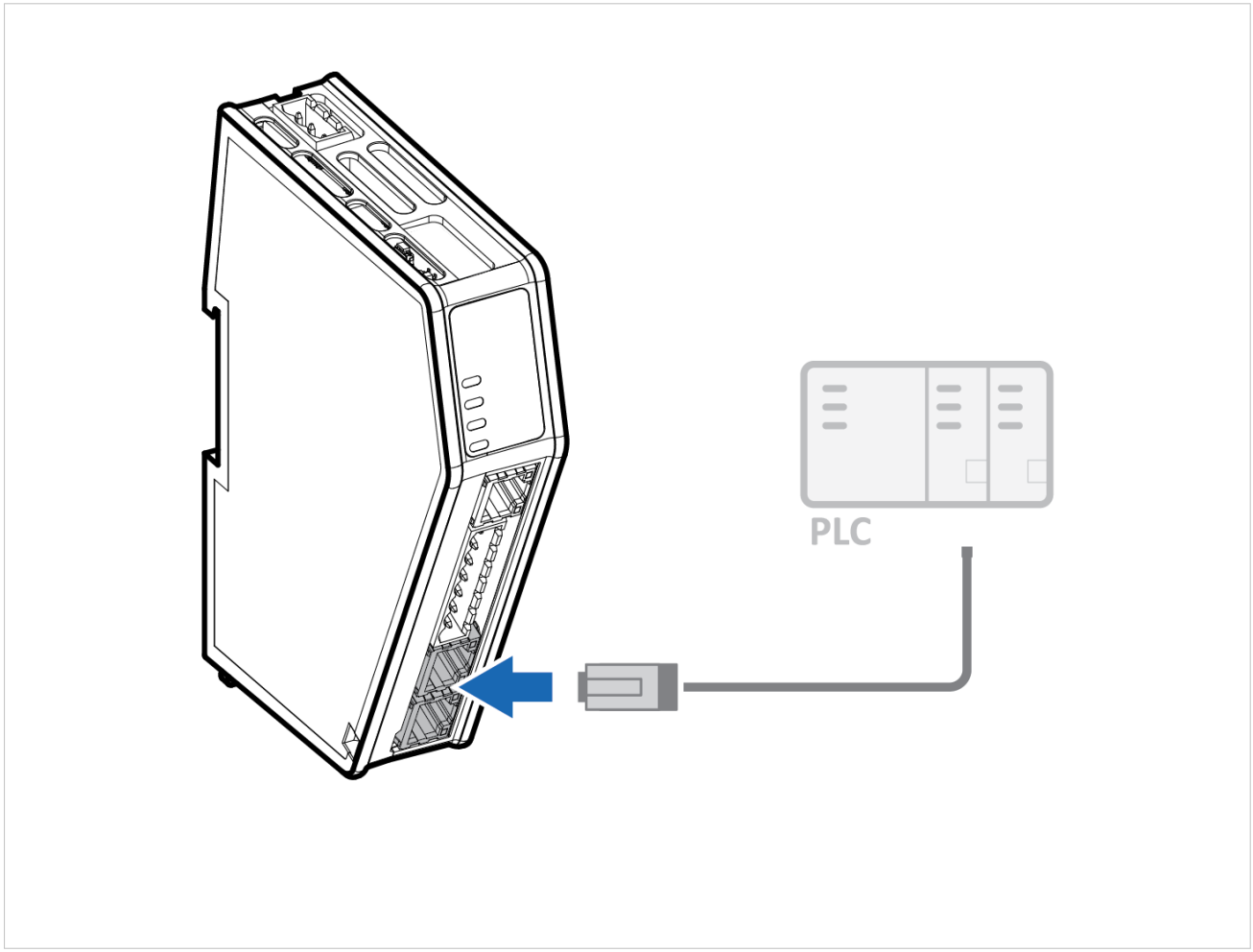

Figure 4. Connect Ethernet network

Connect the Communicator to your industrial Ethernet network.

© 2025 HMS Networks

Connect to PROFIBUS Network

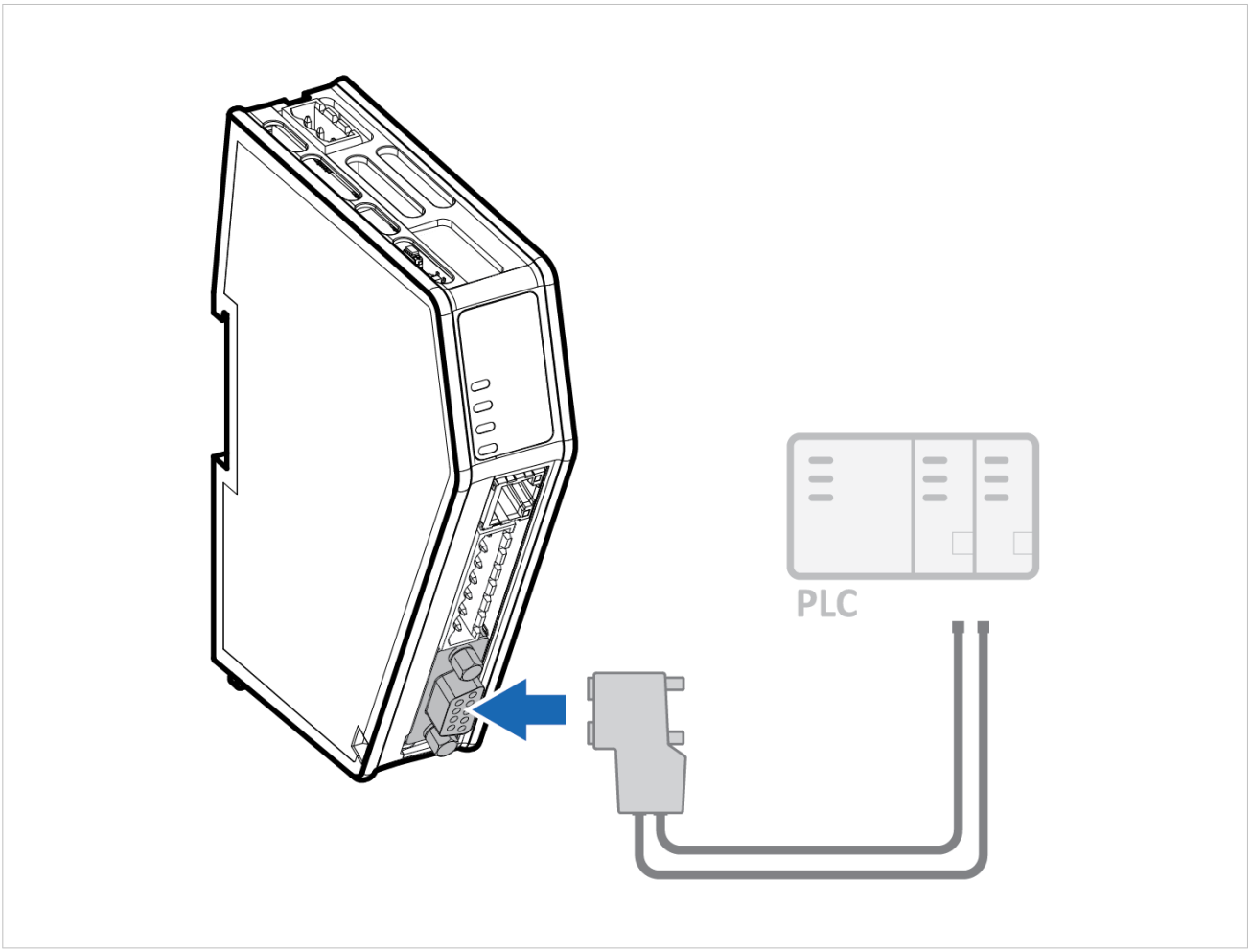

Figure 5. Connect PROFIBUS network

Connect the Communicator to your PROFIBUS network.

© 2025 HMS Networks

Network Connectors Pinout Tables

Modbus RTU Connector Pinout



NOTE
Use minimum 90 °C copper (Cu) wire only.

© 2025 HMS Networks

7-pin connector	Pin	Signal
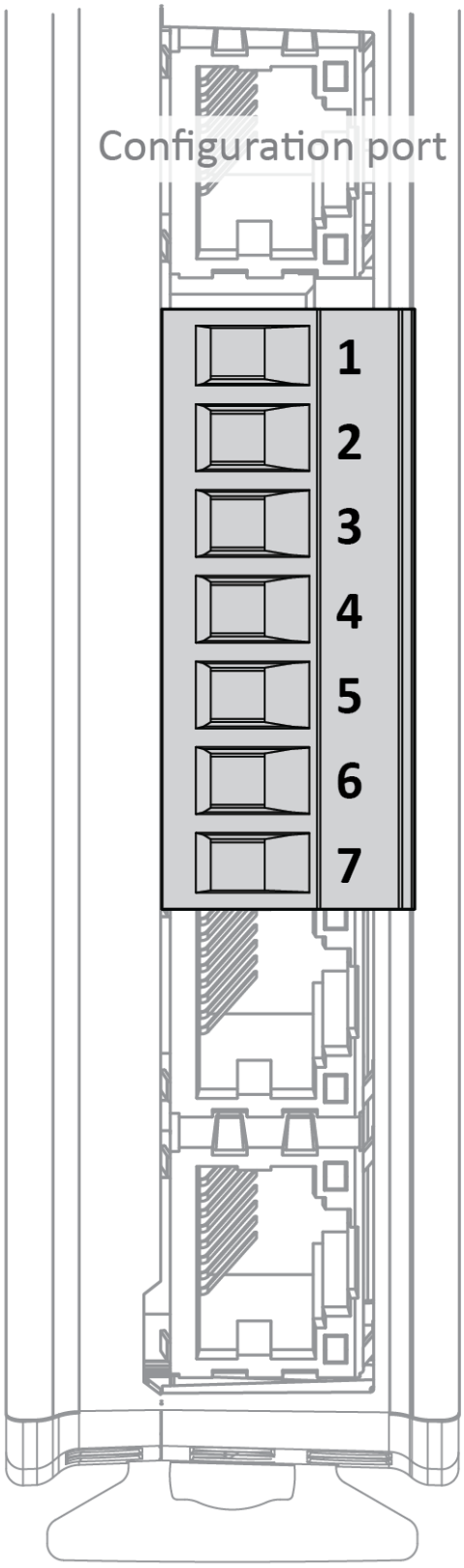	1	+5 V OUT
	2	RS485+ A
	3	RS485- B
	4	Signal GND
	5	Functional Earth (FE)
	6	RS232 Tx Transmit Data
	7	RS232 Rx Receive Data

© 2025 HMS Networks

Ethernet RJ45 Connector Pinout

Ethernet RJ45 Connector	Pin	Description
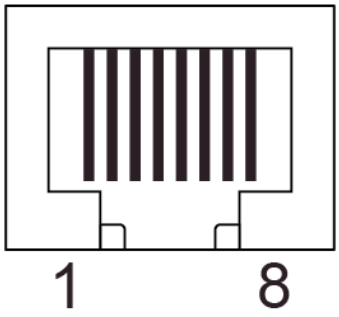	1	TD+
	2	TD-
	3	RD+
	4	Not used
	5	Not used
	6	RD-
	7	Not used
	8	Not used

PROFIBUS D-SUB Female Connector Pinout

PROFIBUS Connector	Pin	Description
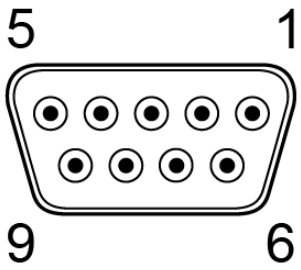	1	Not used
	2	Not used
	3	Line B
	4	RTS
	5	GND Bus
	6	+5 V Bus Out
	7	Not used
	8	Line A
	9	Not used
	Housing	PE

© 2025 HMS Networks

Connect to Power

CAUTION
Ensure that the power supply is turned off before connecting it to the equipment.

IMPORTANT
Using the wrong type of power supply can damage the equipment. Ensure that the power supply is connected properly and of the recommended type.

IMPORTANT
Before you connect the Communicator to power, ensure that the PROFIBUS address is set on the rotary switches. If the PROFIBUS address is set when the Communicator is operating, you must power cycle the Communicator for the new setting to take effect.

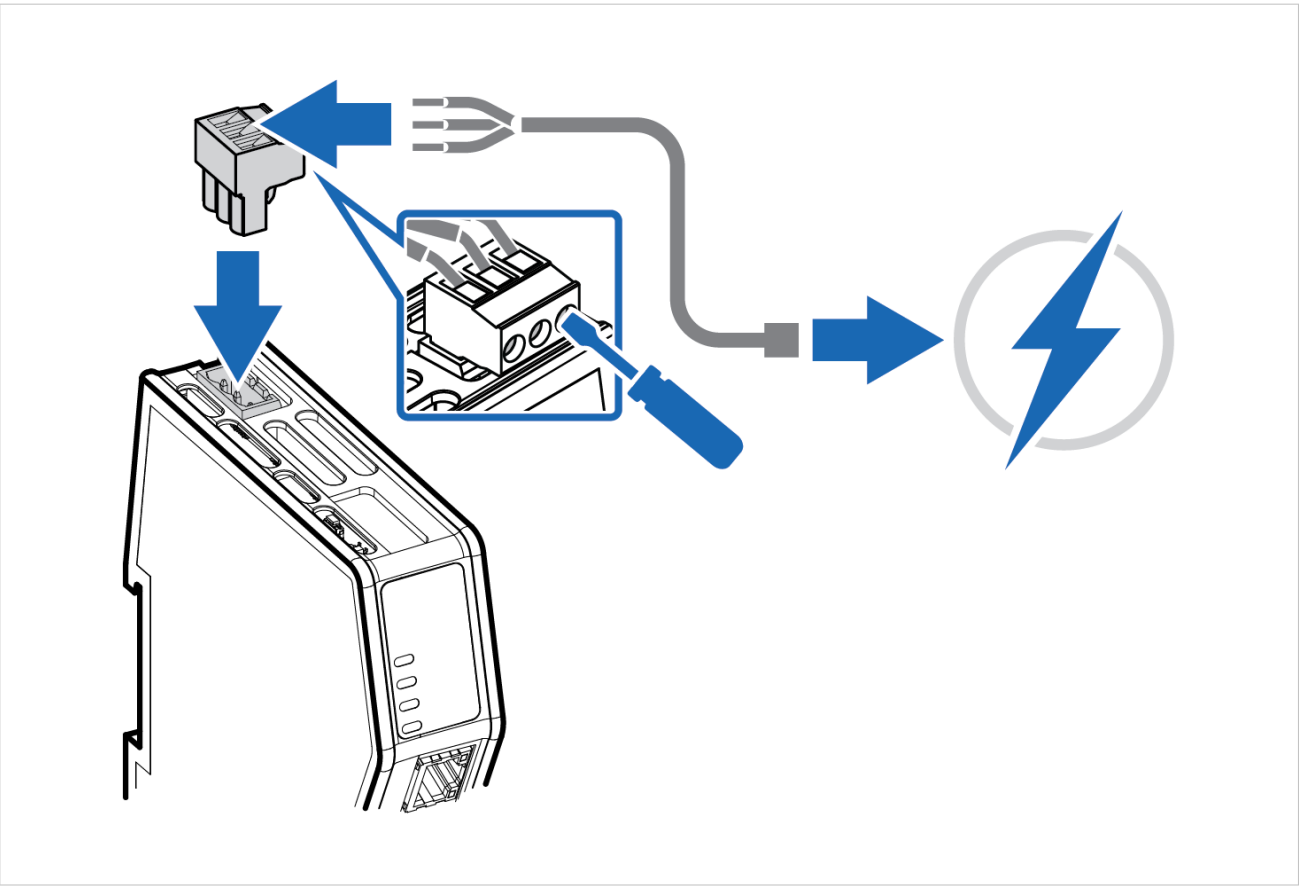

Figure 6. Connect to power

1. Insert the cable wires to the terminal block and tighten the wire clamp screws.
2. Connect the terminal block to the Communicator.
3. Connect the Communicator to a power supply.
4. Turn on the power supply.

© 2025 HMS Networks

Power Connector Pinout

Power port	Pin	Description
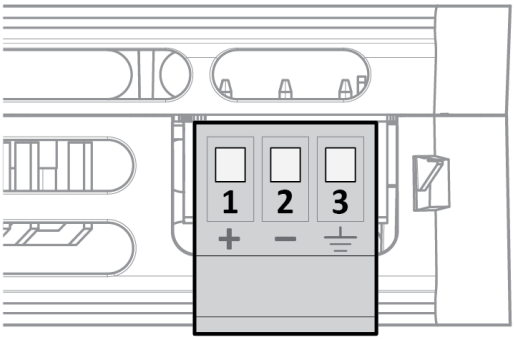	1	12-30 VDC Power Connector
	2	Ground (GND)
	3	Functional Earth (FE)

© 2025 HMS Networks

Security Switch

IMPORTANT
After completing the configuration of the Communicator, lock the security switch to prevent unauthorized access to the Communicator built-in web interface.

When the security switch is in its locked position, the Communicator built-in web interface cannot be accessed, and the Communicator cannot be configured using the built-in web interface. Network specific parameters, configured via the PLC is still available.

To Lock and Unlock the Security Switch

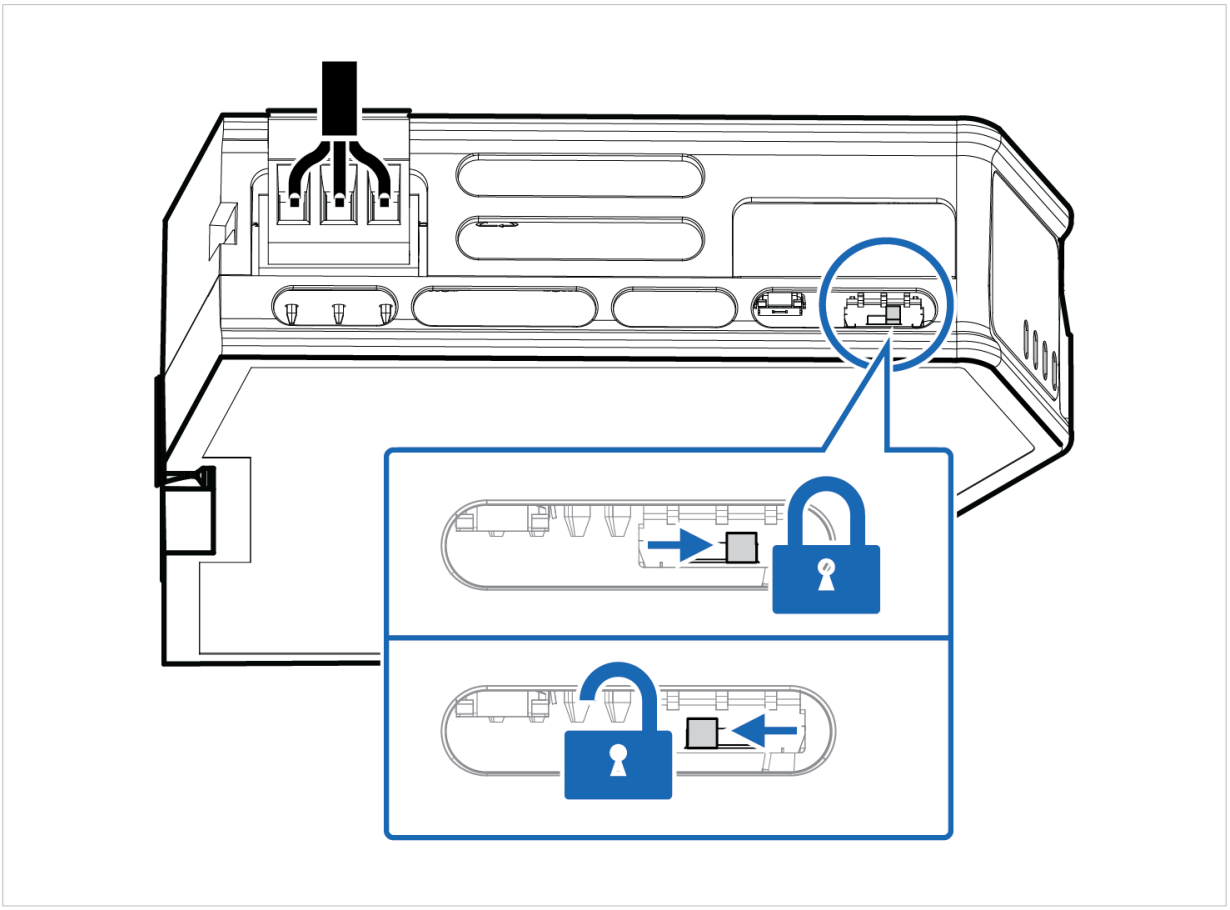

Figure 7. Security switch in locked and unlocked position

Use a pointed object, such as a ballpoint pen.

- To **lock** the security switch, push the toggle towards the **Communicator front**.
- To **unlock** the security switch, push the toggle towards the **Communicator back**.

© 2025 HMS Networks

Security Switch Status LED

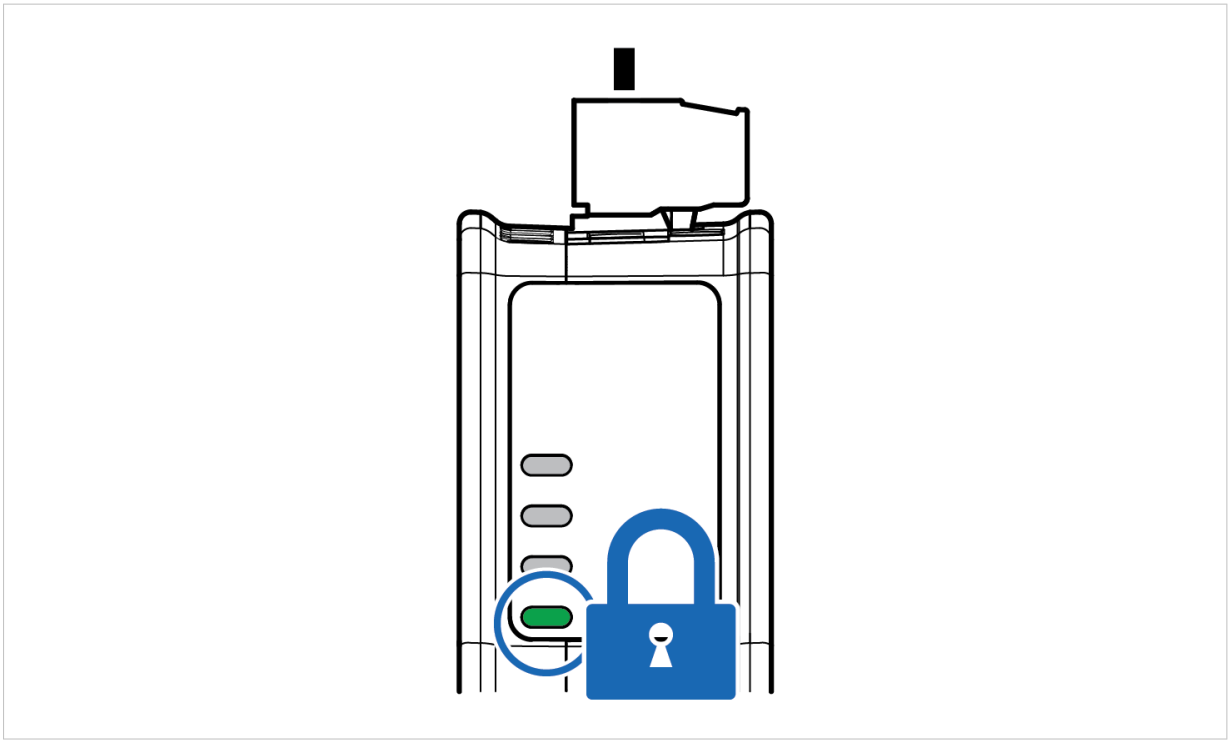

Figure 8. Security switch locked status LED

When the security switch is in its:

- locked position, the security switch status LED turn solid green.
- unlocked position, the security switch status LED is turned off.

© 2025 HMS Networks

Lock the Cables

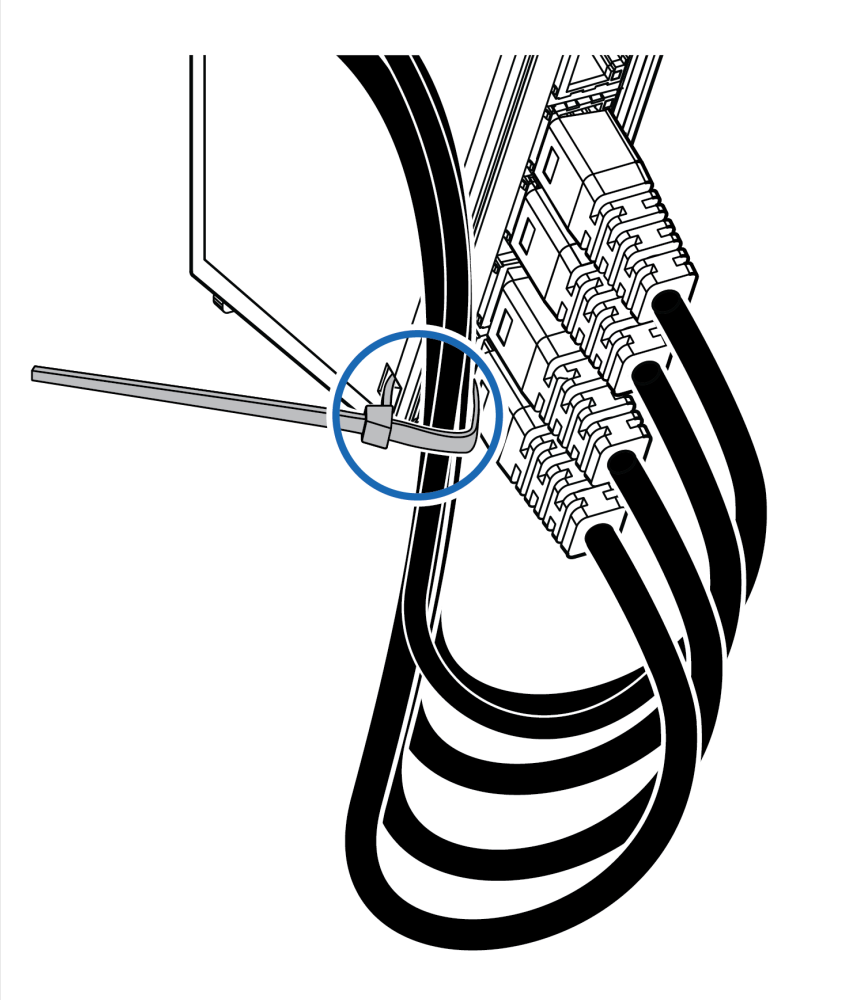

Figure 9. Lock the cables

To strain relieve the cables, place a cable tie in the holder and lock the cables.

© 2025 HMS Networks

DIN Rail Demount

Before You Begin

IMPORTANT
Be careful when removing the Communicator from the DIN-rail. If not removed properly, the DIN rail locking mechanism and the product cover can break.

Have a flat-blade screwdriver, size 5.5 mm, available.

Procedure

Remove the Communicator from the DIN Rail:

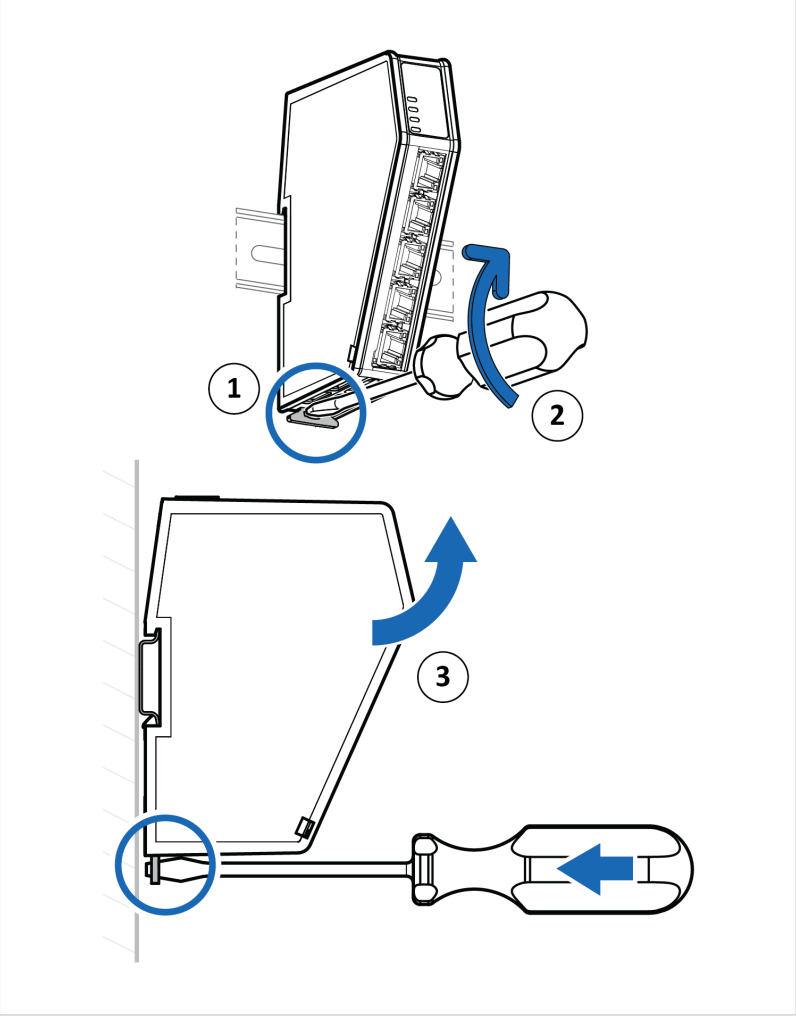

Figure 10. Unlock and unhook the Communicator

1. Insert the screwdriver into the Communicator DIN rail locking mechanism.
2. To unlock the Communicator DIN rail locking mechanism, turn the screwdriver clockwise.
3. Hold the screwdriver in the DIN rail locking mechanism while you unhook the Communicator from the DIN rail.

© 2025 HMS Networks

Prepare Configuration

Connect to PC and Power

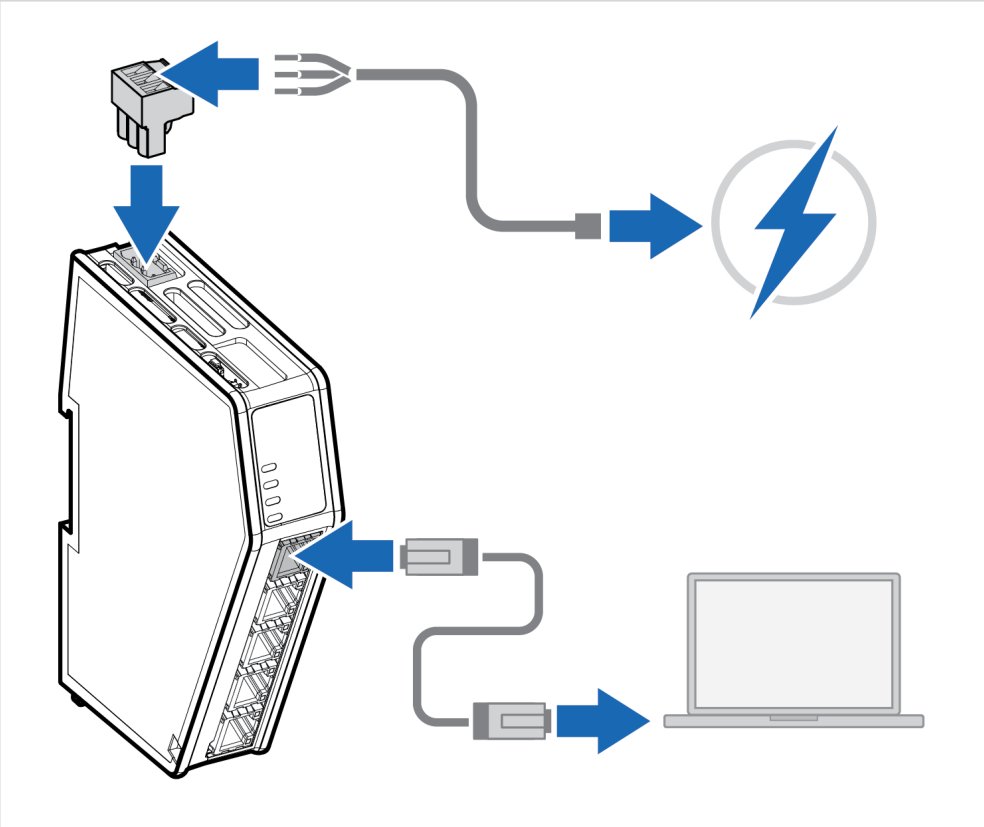

1. Connect an Ethernet cable between the Communicator configuration port and your PC.
2. Connect the Communicator to a power supply.

NOTE
The Communicator default IP address is 192.168.0.10.

© 2025 HMS Networks

Option 1 | Static IP Address



On the PC accessing the Communicator built-in web interface, set a static IP address within the same IP address range as the Communicator IP address.

Option 2 | Configuration Port IP Address



Change the IP address on the Communicator configuration port to one within the same IP address range as your PC.

Use the software application HMS IPconfig to find the Communicator default IP address on your PC.

Download the installation files and user documentation from www.hms-networks.com/technical-support.

© 2025 HMS Networks

Configure the Communicator

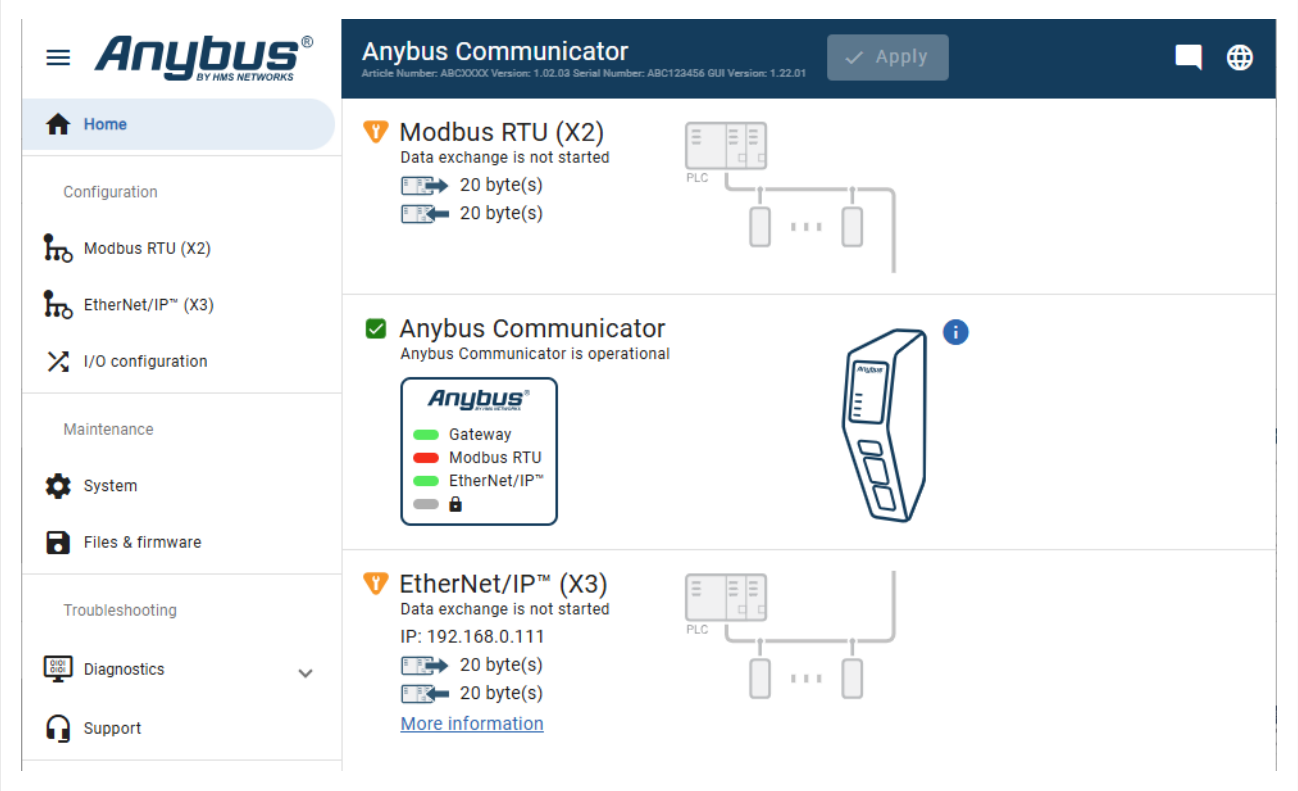

Figure 11. Communicator built-in web interface

Firmware Files and Documentation

Step for Communicator Common Ethernet: Download firmware files and documentation.

NOTE
By default, the Common Ethernet Communicator is preconfigured with the Modbus RTU Server to PROFINET networks.

To download firmware files and user documentation for the desired Communicator network version, visit the www.hms-networks.com/technical-support page, then navigate to the Communicator Common Ethernet product page.

Procedure

1. Open the Communicator built-in web interface.
   You can open the built-in web interface in HMS IPconfig or by entering the Communicator IP address in your web browser.
2. Optional step: The default web interface language is **English**.
   To change language, click the **Language** icon and select a new language from the list. The language change takes effect immediately.

© 2025 HMS Networks

3. Step for Communicator Common Ethernet: Change the preconfigured networks.
   a. In the **Files & firmware** page **Firmware management** section, click **Upload**.
   b. In the Upload Firmware window, click **Select firmware (.hiff)**.
   c. In the Open dialog box, browse to and select the firmware file and click **Open**.
   d. To start the firmware upgrade, click **Update firmware.**
      - The firmware file is validated and transferred.
      - The Communicator reboots and is reset to the factory default settings for the Communicator network variant you have updated to.
4. The built-in web interface takes you through the steps to configure the Communicator.
   For in-depth information about the configuration, refer to the user manual for the installed Communicator network variant.

© 2025 HMS Networks

Communicator LED Indicators

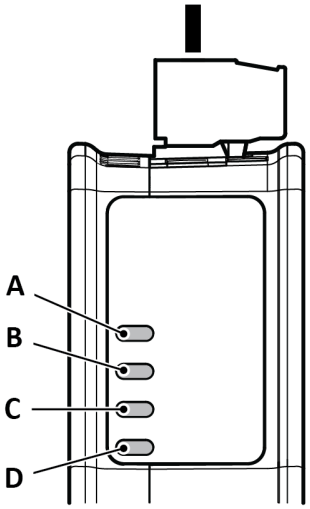

A. **Gateway status**
B. **Industrial Ethernet network**
C. **Modbus RTU Server network**
D. **Security switch**

Gateway Status

Operation status	Description
Off	No power.
Green, flashing	Startup phase.
Green, solid	Operational.
Red, flashing	Invalid configuration.
Green/Red, flashing	Power up self-test. Firmware update. Firmware recovery.

Modbus RTU Server

Operation status	Description
Off	No power.
Green, flashing	Waiting for first Modbus RTU message.
Green, solid	At least one Modbus RTU message received.
Red, solid	Fatal event.
Red, flashing	Connection timeout. No Modbus RTU messages has been received within the configured process active timeout time.

© 2025 HMS Networks

EtherNet/IP

Operation status	Description
Off	No power or no EtherNet/IP IP address.
Green, flashing	EtherNet/IP online, no connections established.
Green, solid	EtherNet/IP online, one or more connections established.
Red, solid	Duplicated EtherNet/IP IP address.
Red, flashing	One or more connections timed out.

EtherCAT

Operation status	Description
Off	No power. EtherCAT device in 'INIT'-state.
Green, one flash	EtherCAT device in 'SAFEOPERATIONAL'-state.
Green, flashing	EtherCAT device in 'PREOPERATIONAL'-state.
Green, solid	EtherCAT device in 'OPERATIONAL'-stat.
Red, one flash	Unsolicited state change. SubDevice application has changed the EtherCAT state autonomously.
Red, two flashes	Sync Manager watchdog timeout.
Red, flashing	Invalid configuration.
Red, solid	Fatal event.
Green/Red, flashing	EtherCAT RUN (green) and ERROR (red) LED combined.*

*The EtherCAT RUN (green) and ERROR (red) LED behaviors are combined in LED (C)/(D). This can cause LED (C)/(D) to alternate between red and green. The LED behavior still represents the states described in the table.

Modbus TCP

Operation status	Description
Off	No power or no IP address.
Green, flashing	Modbus TCP online, no messages received.
Green, solid	Modbus TCP online, at least one message received.
Red, solid	IP address conflict detected.
Red, flashing	Connection timeout.

PROFINET

Operation status	Description
Off	No power or no connection with IO controller.
Green, flashing	Used by engineering tools to identify the node on the network.
Green, one flash	Connection with IO controller establish. IO controller in STOP state or IO data bad.
Green, solid	PROFINET network online, one or more connections established.
Red, solid	FATAL event.
Red, one flash	Station name not set.
Red, two flashes	IP address not set.
Red, three flashes	Expected Identification differs from Real Identification.
Red, flashing	One or more connections timed out.

© 2025 HMS Networks

PROFIBUS

Operation status	Description
Off	No power or no data exchange.
Green, flashing	Clear, data exchange.
Green, solid	Operate, data exchange.
Red, solid	FATAL event.
Red, one flash	Parameterization error.
Red, two flashes	PROFIBUS configuration error.

Security Switch

Operation status	Description
Off	No power. Security switch is unlocked. Exception.
Green, solid	Security switch is locked.

Fatal Error and Exception Error

Fatal error: A fatal error causes the Communicator firmware application to crash in an uncontrolled manner.

Exception error: An exception error causes the Communicator to enter a controlled error state. The Communicator firmware application is still running.

LED	Fatal error	Exception error
A	Red, solid	Red, solid
B	Red, solid	Off
C	Red, solid	Off
D	Off	Off

© 2025 HMS Networks

Ethernet RJ45 LED Indicators

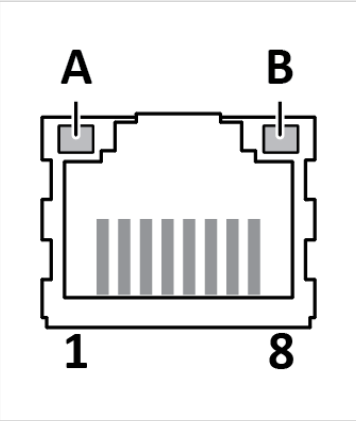

Figure 12. LED A. Activity LED B. Not used

LED A	Function
Off	No link (or no power)
Green	Link (100 Mbit/s) established EtherCAT: Link established
Green, flashing	Activity (100 Mbit/s) EtherCAT: Activity
Yellow	Link (10 Mbit/s) established EtherCAT: Yellow LED is not used
Yellow, flashing	Activity (10 Mbit/s) EtherCAT: Yellow LED is not used

LED B	Function
Off	Not used

© 2025 HMS Networks

Connector Port Guide

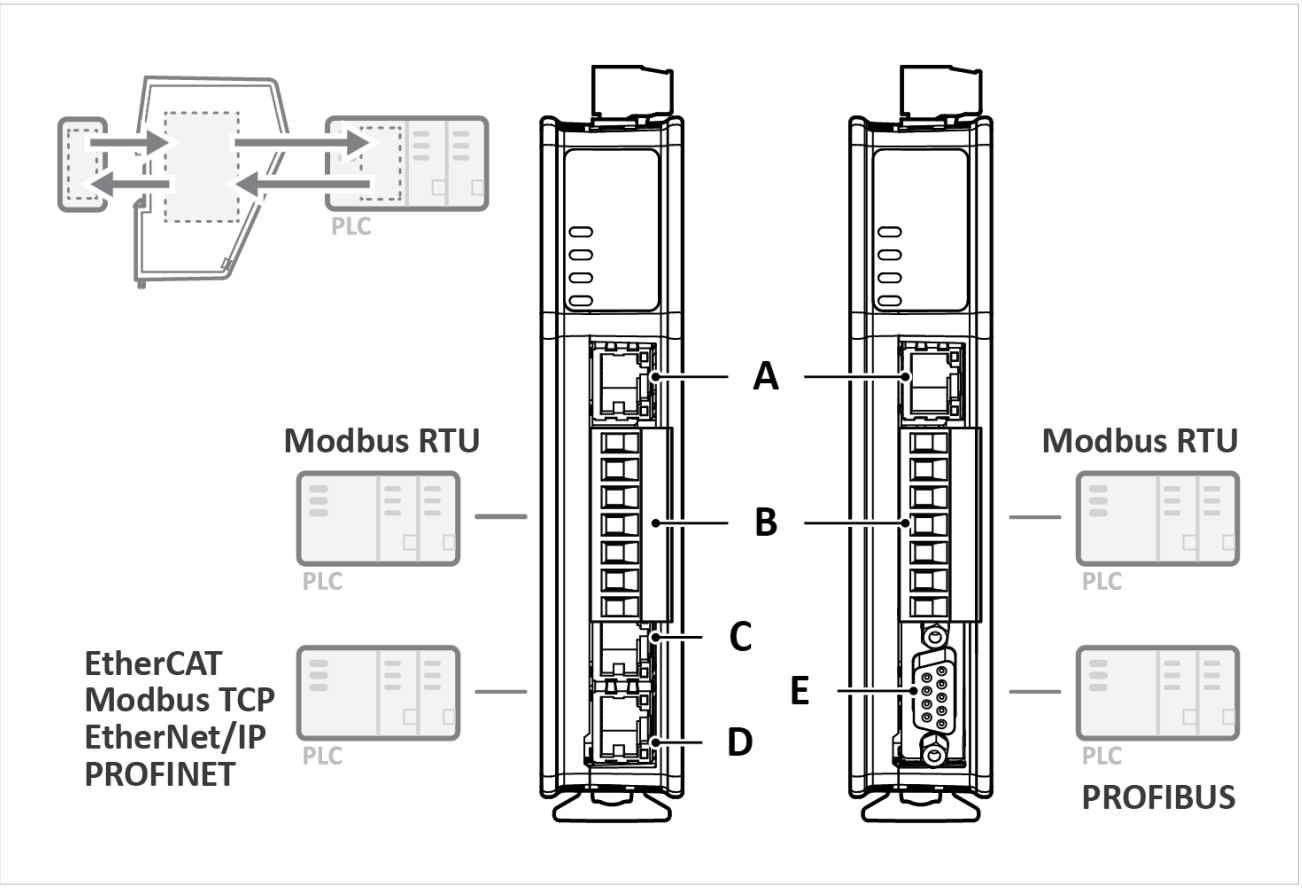

Figure 13. Communicator connector ports

Position	Port Number	Connector	Port Usage
A	X1	Ethernet RJ45	Configuration port
B	X2	7-pin screw terminal block	Modbus RTU Server
C	X3.1	Ethernet RJ45	Modbus TCP, EtherNet/IP, PROFINET, EtherCAT
D	X3.2		Modbus TCP, EtherNet/IP, PROFINET, EtherCAT
E	X3	D-sub	PROFIBUS

© 2025 HMS Networks

Technical Specifications

Item Number	ABC4024, ABC4025, ABC4026, ABC4027, ABC4092	ABC4028
Configuration connector	RJ45	
Upper connector	7-pin screw connector	
Lower connector	RJ45 x 2	9-pin D-sub
Power connector	3-pin screw connector	
Power supply	12-30 VDC, Reverse voltage protection and short circuit protection	
Power consumption	Typical: 90 mA @ 24 V (2.2 W) Max: 3 W	
Storage temperature	-40 to +85 °C	
Operating temperature	-25 to +70 °C	
Humidity	EN 600068-2-78: Damp heat, +40°C, 93% humidity for 4 days EN 60068-2-30: Damp heat, +25°C – +55°C, 95% RH, 2 cycles	
Vibration	See datasheet	
Housing material	Plastic, See datasheet for details	
Protection class	IP20	
Product weight	150 g	
Dimensions	27 x 144 x 98 mm (W x H x D) with connectors included	
Mounting	DIN-rail	

Additional technical data and information related to the installation and use of this product can be found at www.hms-networks.com.

© 2025 HMS Networks